4. Oil Pump

A: REMOVAL

1) Set the vehicle on a lift.
2) Disconnect the ground cable from the battery.

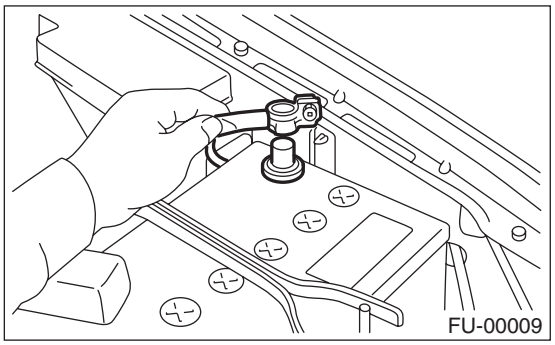

3) Lift up the vehicle.
4) Remove the under cover.
5) Lower the vehicle.
6) Remove the radiator. <Ref. to CO(H4SO)-23, REMOVAL, Radiator.>
7) Remove the V-belts. <Ref. to ME(H4SO)-39, REMOVAL, V-belt.>
8) Remove the belt tensioner.

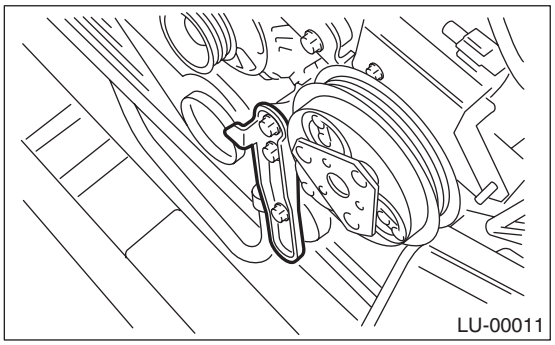

9) Remove the crankshaft position sensor.

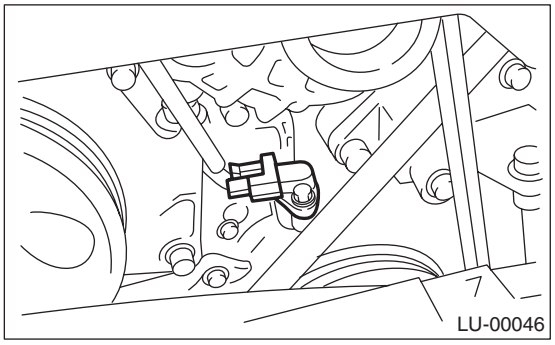

10) Remove the crank pulley using ST.
ST 499977100 CRANK PULLEY WRENCH

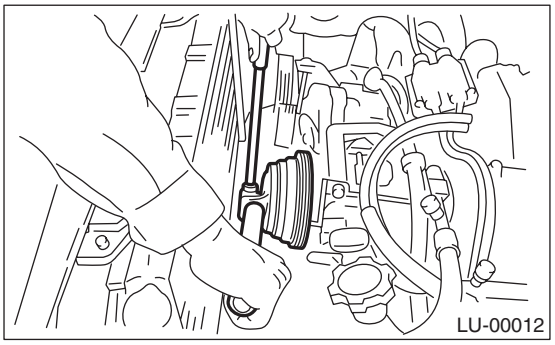

11) Remove the water pump. <Ref. to CO(H4SO)-18, REMOVAL, Water Pump.>
12) Remove the timing belt guide. (MT model)

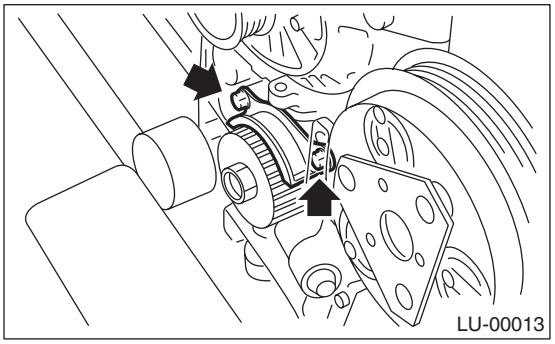

13) Remove the crank sprocket.

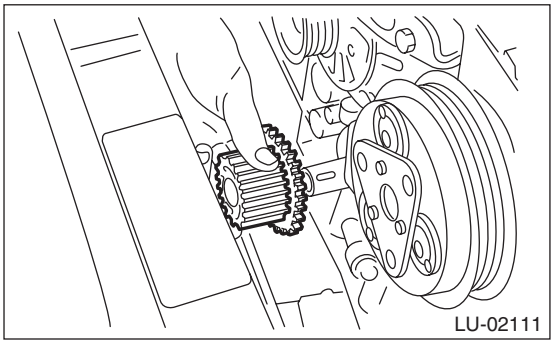

14) Remove the bolts which install oil pump onto cylinder block.

NOTE:
When disassembling and checking the oil pump, loosen the relief valve plug before removing the oil pump.

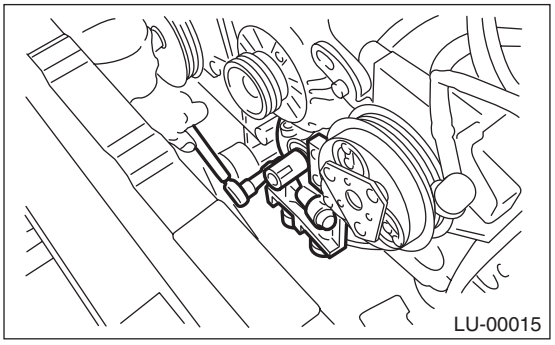

15) Remove the oil pump by using flat tip screwdriver.

CAUTION:
Be careful not to scratch mating surfaces of cylinder block and oil pump.

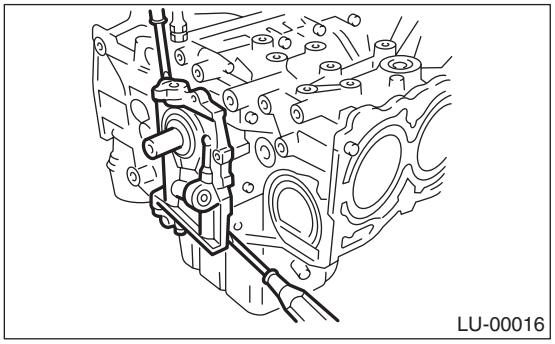

B: INSTALLATION

Install in the reverse order of removal.
Perform the following.
1) Using the ST, install the front oil seal.

NOTE:
Use a new front oil seal.
ST 499587100 OIL SEAL INSTALLER

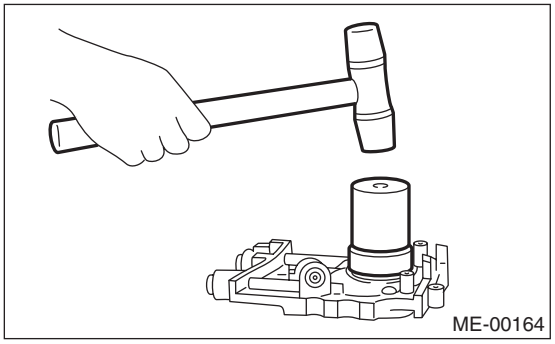

2) Apply liquid gasket to the mating surfaces of oil pump.

Liquid gasket:
THREE BOND 1215 (Part No. 004403007) or equivalent

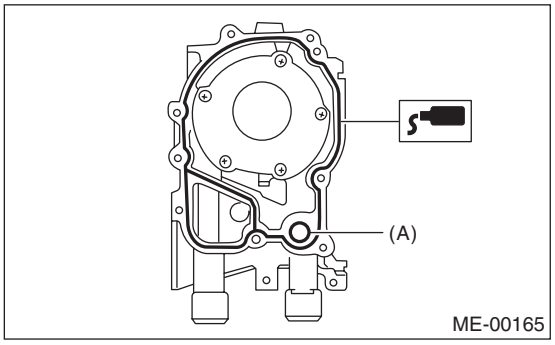

(A) O-ring

3) Apply a coat of engine oil to the inside of oil seal.

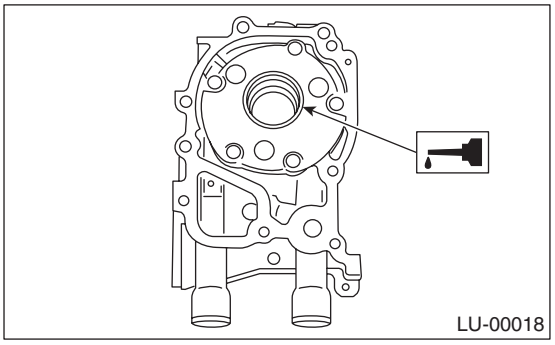

4) Be careful not to scratch the oil seal when installing oil pump on cylinder block.

NOTE:
- Make sure the oil seal lip is not folded.
- Align the flat surface of oil pump's inner rotor with crankshaft before installation.
- Use a new O-ring and oil seal.
- When disassembly and check of the oil pump was performed, tighten the relief valve plug after attaching the oil pump.

Tightening torque:
44 N·m (4.5 kgf-m, 32.5 ft-lb)

5) Apply liquid gasket to the three bolts thread shown in figure. (When reusing the bolts)

Liquid gasket:
THREE BOND 1324 (Part No. 004403042) or equivalent

Tightening torque:
6.4 N·m (0.65 kgf-m, 4.7 ft-lb)

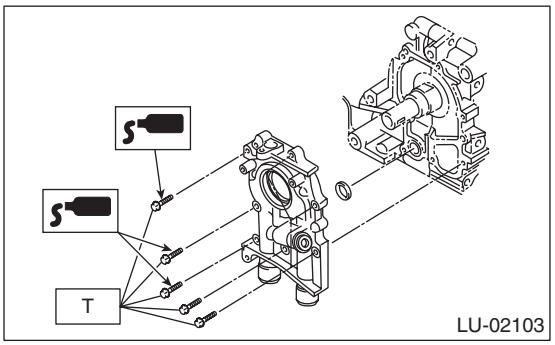

C: DISASSEMBLY

Remove the screw which secures oil pump cover and then disassemble oil pump. Inscribe alignment marks on the inner and outer rotors so that they can be replaced in their original positions during reassembly.

NOTE:
Before disassembling the oil pump, remove the relief valve.

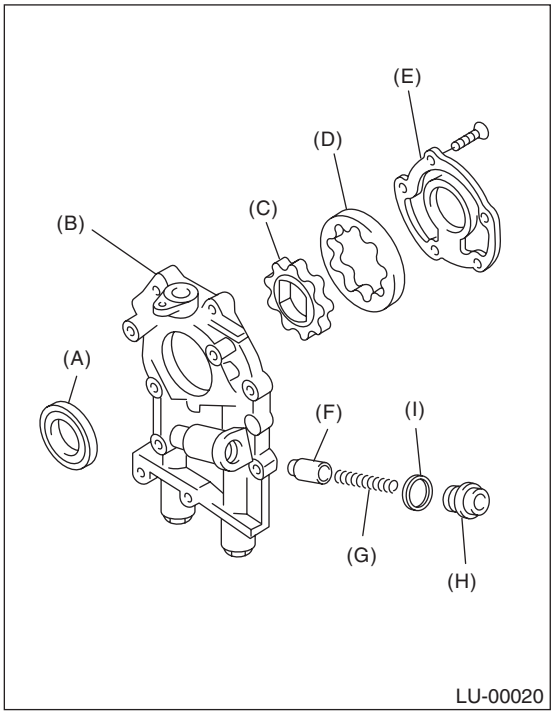

(A) Oil seal
(B) Oil pump case
(C) Inner rotor
(D) Outer rotor
(E) Oil pump cover
(F) Relief valve
(G) Relief valve spring
(H) Plug
(I) Gasket

D: ASSEMBLY

1) Assemble the front oil seal by using ST.

NOTE:
Use a new front oil seal.
ST 499587100 OIL SEAL INSTALLER

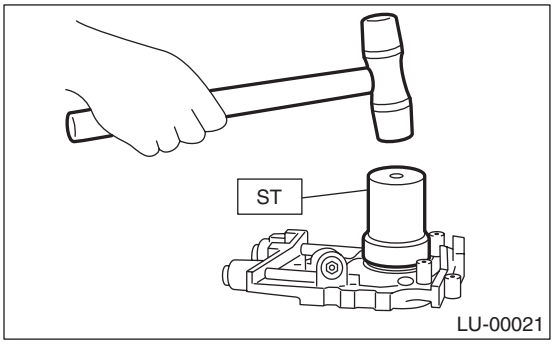

2) Apply a coat of engine oil to inner and outer rotors.
3) Assemble the inner and outer rotors in their original positions.
4) Assemble the oil relief valve and install relief valve spring and plug.

NOTE:
Use a new gasket.

5) Assemble the oil pump cover.

Tightening torque:
T1:5.4 N·m (0.55 kgf-m, 4.0 ft-lb)
T2: 44 N·m (4.5 kgf-m, 32.5 ft-lb)

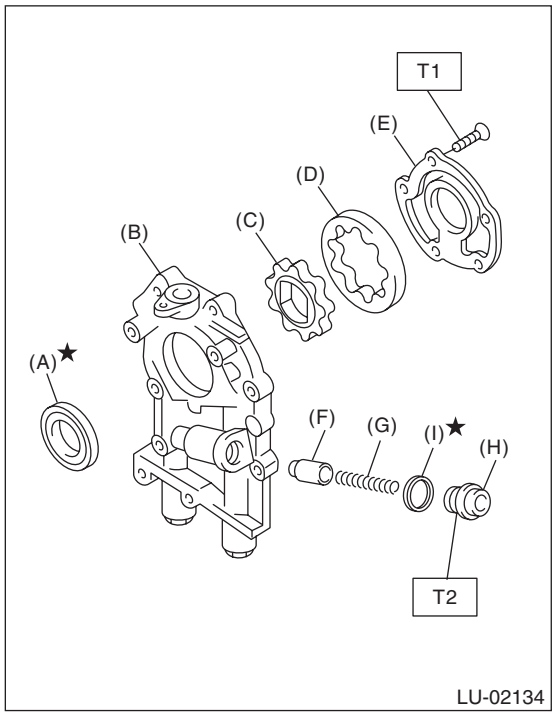

(A) Oil seal
(B) Oil pump case
(C) Inner rotor
(D) Outer rotor
(E) Oil pump cover
(F) Relief valve
(G) Relief valve spring
(H) Plug
(I) Gasket

E: INSPECTION

1. TIP CLEARANCE

Measure the tip clearance of rotors. If the clearance exceeds the limit, replace rotors as a matched set.

Tip clearance:
Standard
0.04 — 0.14 mm (0.0016 — 0.0055 in)
Limit
0.18 mm (0.0071 in)

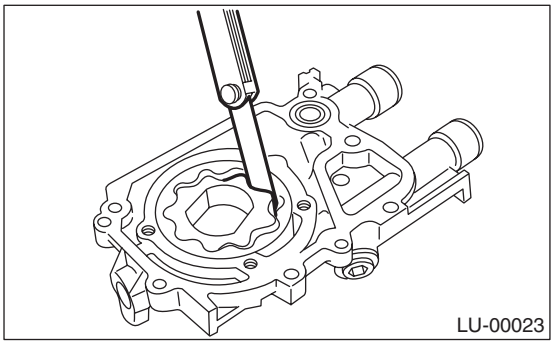

2. CASE CLEARANCE

Measure the clearance between outer rotor and oil pump case. If the clearance exceeds the limit, replace the rotor.

Case clearance:
Standard
0.10 — 0.175 mm (0.0039 — 0.0069 in)
Limit
0.20 mm (0.0079 in)

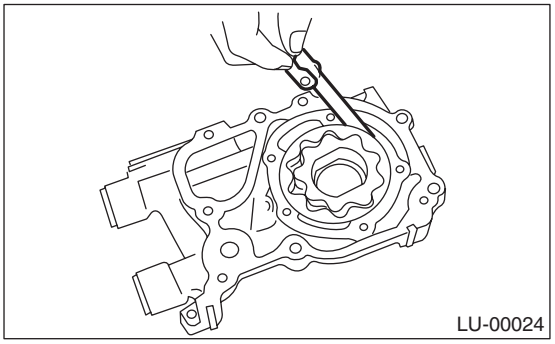

3. SIDE CLEARANCE

Measure the clearance between oil pump inner rotor and oil pump case. If the clearance exceeds the limit, replace rotor or oil pump case.

Side clearance:
Standard
0.02 — 0.07 mm (0.0008 — 0.0028 in)
Limit
0.12 mm (0.0047 in)

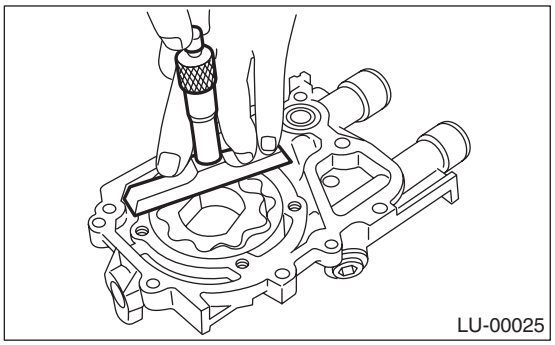

4. OIL RELIEF VALVE

Check the valve for poor assembly condition and damage, and the relief valve spring for damage and deterioration. Replace the parts if defective.

Relief valve spring:
Free length
73.7 mm (2.902 in)
Installed length
54.7 mm (2.154 in)
Load when installed
93.1 N (9.49 kgf, 20.88 lbf)

5. OIL PUMP CASE

Check for worn shaft holes, clogged oil passages, cracks and other faults.

6. OIL SEAL

Check the oil seal lips for deformation, hardening, wear, etc. and replace if defective.